HAWK

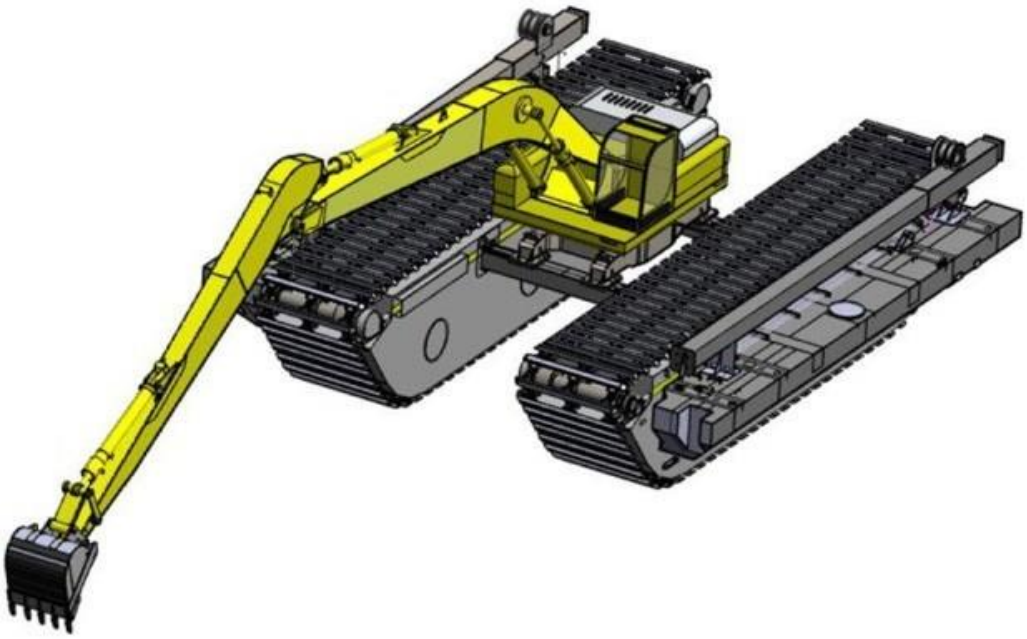

# AT300-V2 / AT300PS-V2

## AMPHIBIOUS EXCAVATOR

## OPERATION, INSTALLATION, AND MAINTENANCE MANUAL

CERT NO: TUV100 01 2043
ISO 9001: 2015

HawkExcavator.com

# FOREWORD

The **Amphibious Hydraulic Excavator AT300-V2/AT300PS-V2** with two pontoons is a type of fully multi-purpose hydraulic excavator developed and manufactured by HAWK Excavators. It is designed for use on soft ground, marshland, as well as in shallow water.

This manual will help users understand the structure, features, and functions of this machine in a thorough and systematic way, to facilitate operation and maintenance.

The correct way of operation, as well as proper and timely maintenance, can fully develop the best performance of this machine, improving its working efficiency and extending its life. This manual explains the essentials of the operation, maintenance methods, and troubleshooting. Operators and technical personnel should read the manual before using this machine and follow its requirements. This manual is a supplementary part of the AT300-V2/AT300PSV2 amphibious excavator operation and maintenance manual.

**TABLE OF CONTENTS**

## 1.0 MAIN SPECIFICATIONS

### 1.1 MAIN PERFORMANCE PARAMETERS

| No | ITEM | | UNIT | SPECIFICATION | REMARKS |
|---|---|---|---|---|---|
| 1 | MAIN | MODEL | | AT300-V2/AT300PS-V2 | |
| | TRAVEL MOTOR | QUANTITY: 4 MOTOR/SET | | HIGH QUALITY HYDRAULIC MOTOR<br>ORIGIN: KOREA | |
| 2 | SPUD POLE MOTOR | QUANTITY: 2 MOTOR/SET | | HIGH QUALITY HYDRAULIC MOTOR<br>ORIGIN: KOREA | |
| 3 | TRAVEL SPEED | GROUND | km/h (mph) | 0-3.2 (0-1.9) | |
| | | MARSHLAND | km/h (mph) | 0-2 (0-1.2) | |
| | | IN STILL WATER | km/h (mph) | 0-1.75 (0-1.08) | |
| 4 | GRADEABILITY | | | 30° | |
| 5 | PONTOON VOLUME CAPACITY | | $m^3$ (gal) | 60 (15,850) | |
| 6 | ADDITIONAL PONTOON VOLUME CAPACITY | | $m^3$ (gal) | 10.8 (2,853.05) | |
| 7 | GROUND PRESSURE | WITH LONG REACH ARM | MPa (psi) | 0.015 (2.17) | |
| 8 | SPUD POLE | MOVEMENT SPEED | mm/s (ft./sec) | 150 (0.492) | |

### 1.2 OPERATING CONDITIONS

The hydraulic amphibious excavator AT300-V2/AT300PS-V2 is strongly recommended for working on wet ground, marshland, and shallow water. To avoid overturning and damage, the amphibious excavator must be operated strictly in accordance with the following allowable conditions:

#### 1.2.1 ALLOWABLE CONDITIONS

1. Work on wet ground, marshland, and shallow water.
2. The machine can travel and work in water not deeper than 2 meters, and work normally under the following conditions:

a) The water flow speed: is 24 m/min (1.31 feet/second) or less.

b) The wave height: is 0.1m (3.93 in) or less.

c) The wind speed: is 240 m/min (8.94 mph) or less.

#### 1.2.2 NON-ALLOWED CONDITIONS

1. Do not operate the machine on stumps, hard stones, or uneven ground that is frozen and solid, when mounted with additional pontoons.
2. Do not attempt to operate the excavator when completely floating in water.
3. Do not travel over water of an unknown depth.
4. Do not use a bucket larger than the designated one. Otherwise, it will affect the stability of the machine. The machine is only used for light loads and shouldn't be used for heavy loads.

## 2.0 STRUCTURE

The AT300-V2/AT300PS-V2 hydraulic amphibious excavator has four traveling devices (two traveling motors per amphibious undercarriage). Figure 2.0 shows a simple drawing of the structure of the machine.

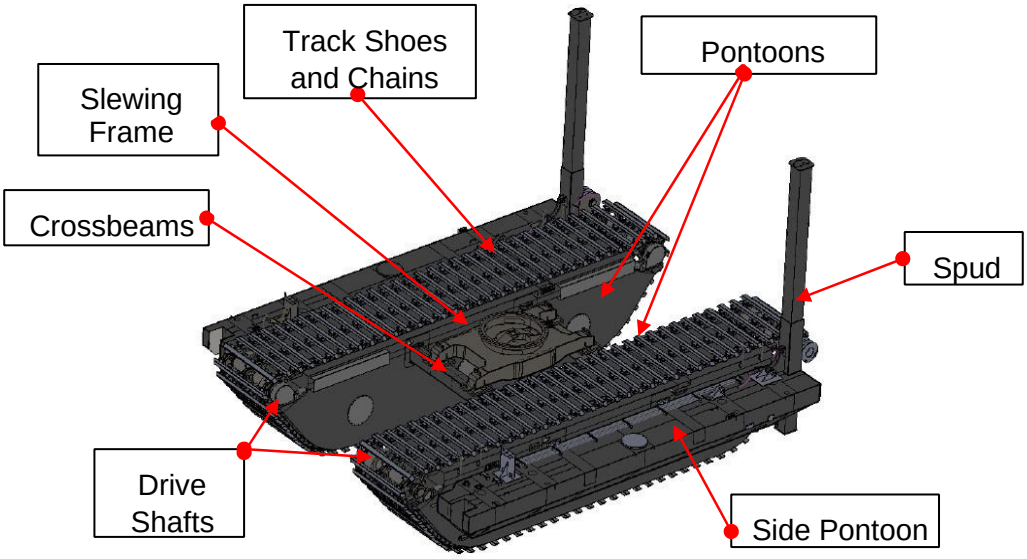

***Figure 2.0:*** *Amphibious Undercarriage Structure*

### 2.1 PARKING BRAKE

The machine normally comes with a closed-type brake, which is an automatic brake device using spring force when the excavator is parked on a slope.

When the machine is working, the brake valve on the travel motor will automatically be released each time the travel foot pedal is activated to move forward or backward.

## 3.0 OPERATION

The operator must read the machine manufacturer's operation manual, and all warning and control labels before attempting to operate the machine.

### 3.1 PRECAUTIONS BEFORE USING A NEW MACHINE

The service life of an excavator is largely dependent on the load condition of its initial use. The operator should increase the load according to the following instructions before using a new machine. The operator can set the load time by working hours on display, according to the lubrication chart and maintenance instructions.

Overloading will cause scratches on the hydraulic motors, and during test runs it will affect the service life of the machine.

**During the Test:**

| WORKING TIME | LOAD |
|---|---|
| First 50 hours | 80% of the load (74% of the diesel engine rated rpm) |
| After 50 hours | Full Load |

#### 3.1.1 INSPECT THE FOLLOWING ITEMS BEFORE OPERATING

1. Check for any parts that were broken, missing, or loosened during transportation.
2. Check the track chain tension.
3. Make sure that there are no oil or hydraulic oil leaks in any part of the machine.
4. Use the recommended oil and grease.
5. Make sure there are no defects in the hydraulic hoses and hydraulic lines.
6. Close the manual valve when performing maintenance procedures. Special attention should be paid during the opening of the manual valve before starting the engine after maintenance.
7. Make sure that the spud poles are in their original position when traveling.

## 3.2 OPERATING THE MACHINE

### 3.2.1 PRECAUTIONS

1. **Thoroughly check the pontoons for cracks and leaks** before traveling on marshland or water. If any defects are found, stop using the machine immediately. Proceed with the inspection, and repair the defects accordingly.
2. **The chain must be correctly tensioned** during operation, because if the machine takes a turn on marshland and its chain is too loose, misalignment may occur. Conversely, if the chain is too tight, it may result in increased resistance.
3. **Apply used oil** to frequently lubricate the track chain, especially after long-distance travel on water or land. This can help to extend the life of the track chain and promote better travel performance.

### 3.2.2 TRAVELING ON LAND

1. Clear the road using the bucket. This is to minimize damage to the track plates and track chains.
2. Do not travel on stumps or uneven ground.

### 3.2.3 TRAVELING ON MARSHLAND

1. The machine may not move efficiently when traveling on poor quality marshland, such as soft or muddy ground. Therefore, in this case, working attachments are required.

### 3.2.4 TRAVELING ON WATER

1. When traveling on water, the operator must adjust the working attachments to ensure the stability of the amphibious excavator. Refer to Figure 3.0.

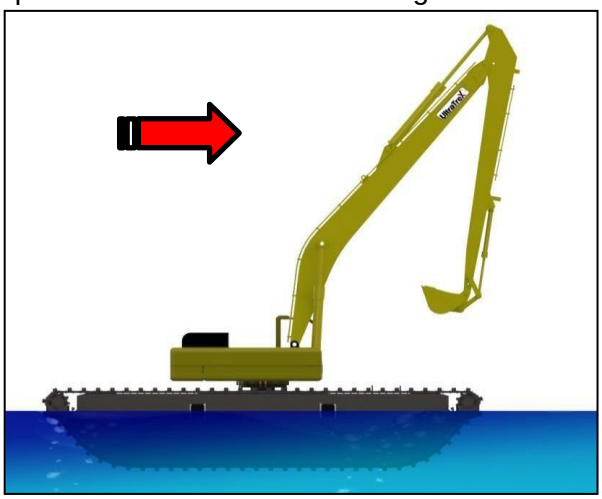

***Figure 3.0:*** *Traveling over water*

2. When the machine is floating, do not perform any digging operations.

3. When traveling on water, the requirements for water speed, wave height, and wind speed are as follows:
   a) The water speed should be less than 24 m/min (1.31 feet/second).
   b) The wave height should be less than 0.1 m (3.93 in).
   c) The wind speed should be less than 240 m/min (8.94 mph).
4. Do not travel in bad weather conditions. Refer to Figure 3.1.

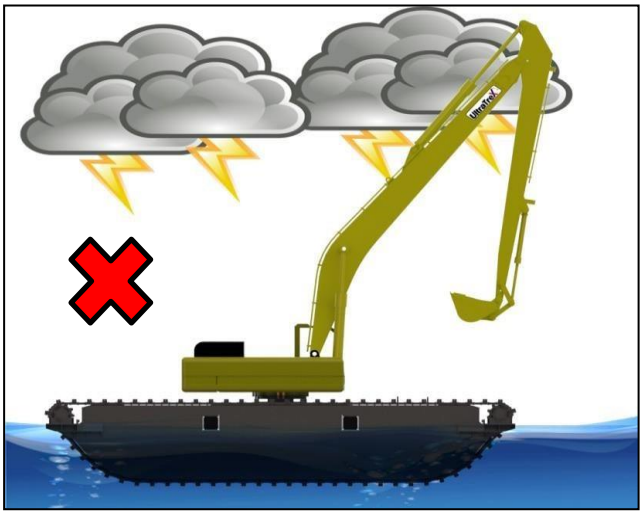

***Fig 3-1:*** *Avoid Traveling in Bad Whether*

### 3.2.5 ENTERING THE WATER

1. Check the water depth before launching the machine. Do not directly launch the machine into the water as it may overturn.
2. When entering the water, the recommended launching site should be a ramp with a less than 30-degree slope, to prevent the machine from tipping over.
   **Note:** The launching slope should go as far as a water depth of not more than 2 meters. Refer to Figure 3.2.
3. If the slope is hard ground, the maximum permissible angle will be 15 degrees.
4. If the above conditions are not met, the bucket may be used to create a path into the water.

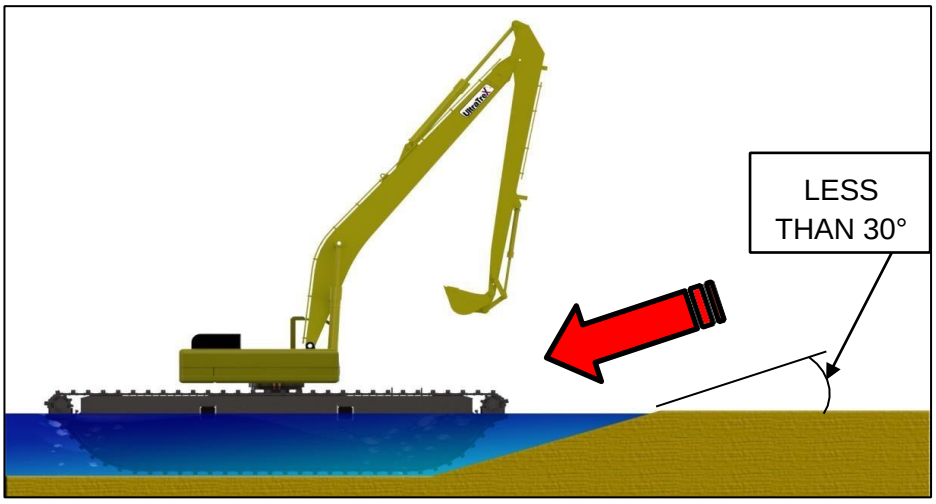

***Figure 3.2:*** *Launching the Amphibious Excavator*

5. Avoid parking the amphibious excavator in the water. Refer to Figure 3.3.

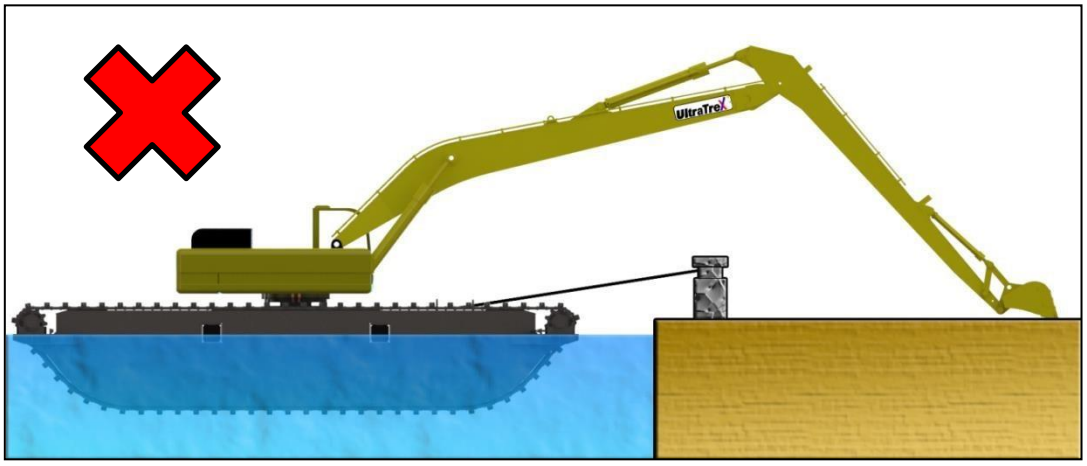


***Figure 3.3:*** *Avoid parking in the water*

### 3.2.6 AVOID EXCAVATION WORK WHILE FLOATING

The amphibious excavator is designed to work on soft ground. Therefore, avoid letting it float in water while working. Performing the digging operation while floating will cause tipping over. Without extra side pontoons and spud poles, in-water excavation is only allowed at a 2-meter depth. Refer to Figure 3.4.

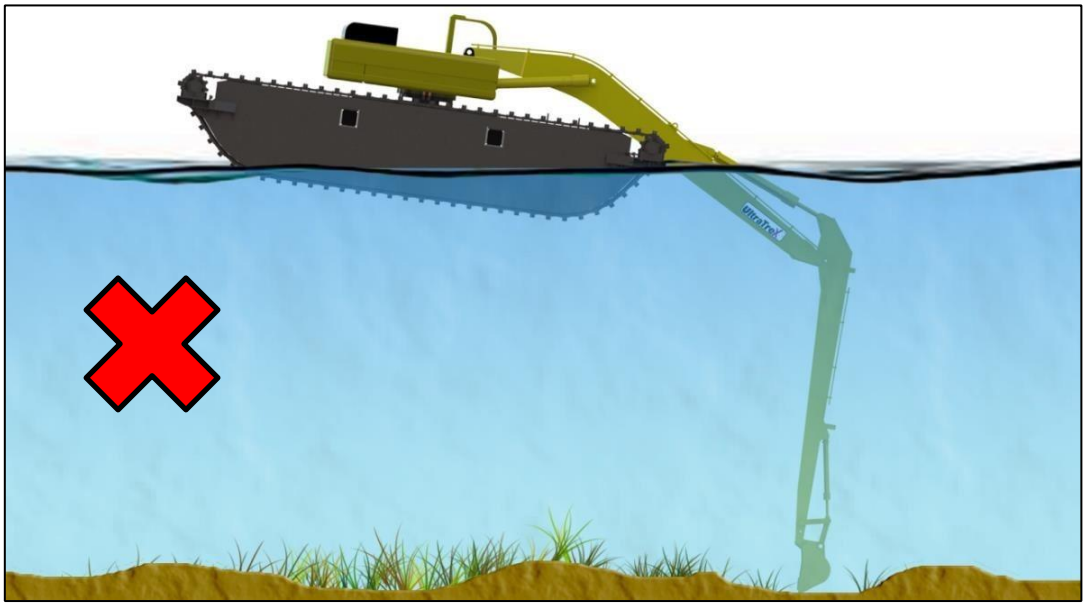


***Figure 3.4:*** *Avoid working while floating*

### 3.2.7 LANDING

1. Methods similar to those applied when entering the water also apply when exiting the water and returning to land.
2. Choose a suitable hard slope and position to exit.
3. Be sure to move to an upright position when landing.
4. The boom and arm should be in the forward position as shown in Figure 3.5.

.

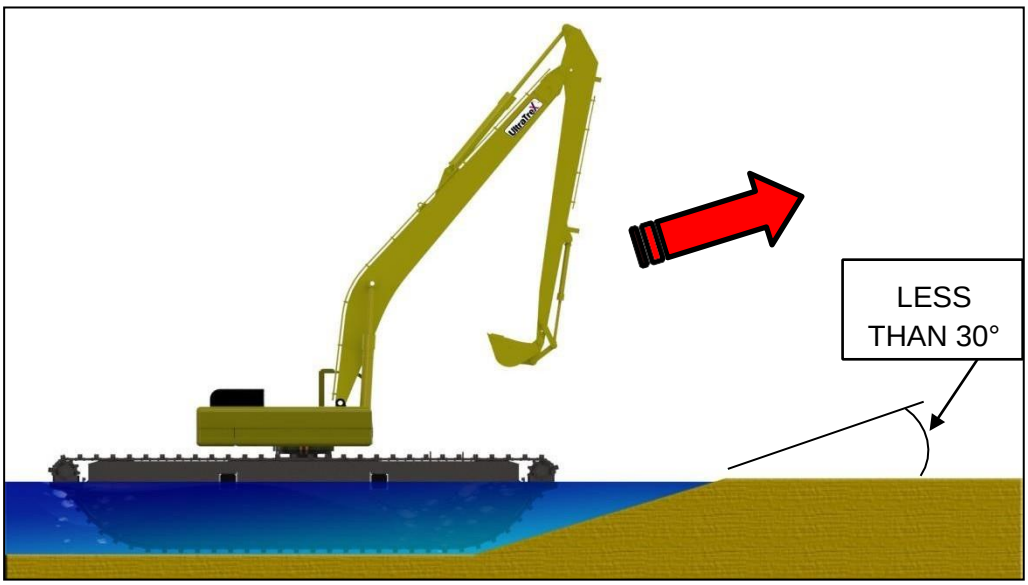


***Figure 3.5:*** *Landing the amphibious excavator*

### 3.2.8 TRAVELING ON WATER AND UNDER A BRIDGE

The machine can travel under a bridge. A proper setting should be applied to ensure safe passage through.

a) Adjust the level of the working attachments.
b) Calculate the height of the working attachments that can pass under the bridge.
c) Make sure the machine is in stable condition.
d) Safety measures and precautions should be applied during the process.

### 3.2.9 SPUDS WORKING PROCEDURE (HORIZONTAL TO VERTICAL POSITION)

1) Open the 3/4” three-way valves ‘A’ and ‘B’, located at the rear of the slewing frame to activate the spud system. Refer to Figure 3.6.

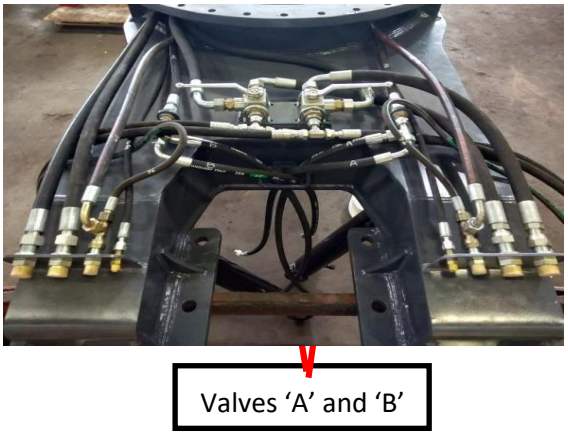


**Figure 3.6:** Spud ball valve position on the rear slewing frame

2) Two pieces of 1/2” three-way ball valves at the top, been placed on the top of the side pontoons to activate the spud hydraulic cylinder or spud drive motor. Extend the spud cylinder by switching the ball valves. By using the machine’s traveling lever inside the cabin, control the spud and adjust it to the standing position. Refer to Figure 3.7.

**Note:** The traveling lever is the mechanism used to control the position of the spud, either horizontally or vertically, and also to raise the spud up or down.

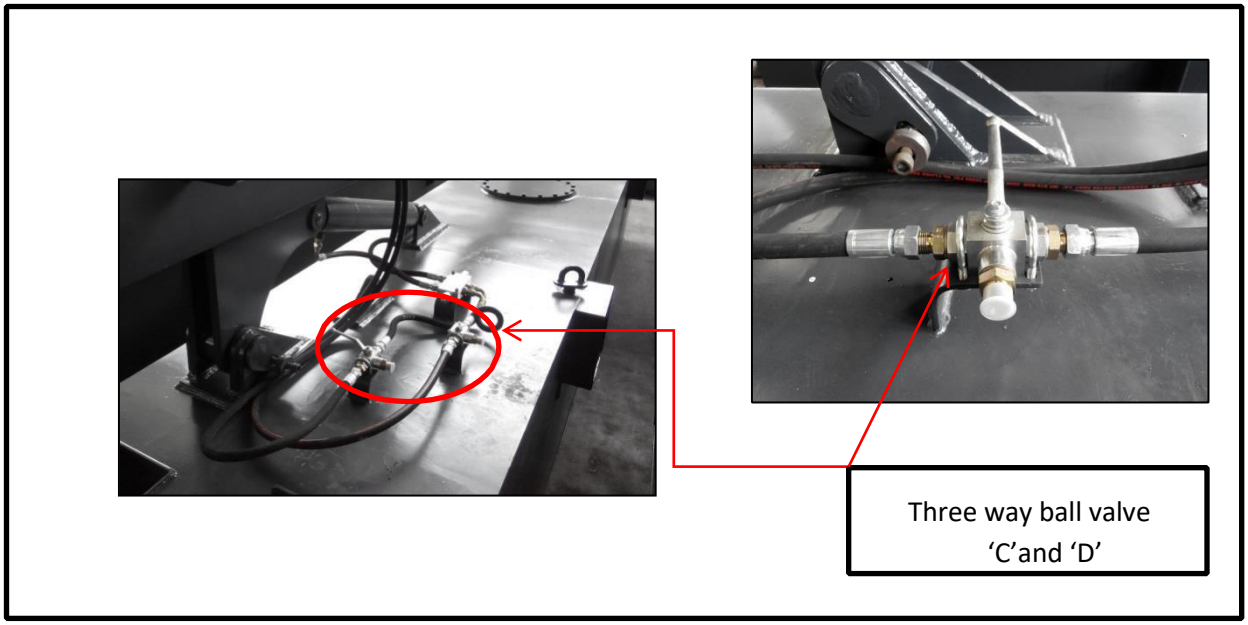


***Figure 3.7:*** *Position of the three-way ball valves to control the spud*

3. Two-way ball valves are used to control the flow of hydraulic fluid:
   a) To the spud cylinder for extending or retracting actions.
   b) To the motor to raise the spud up and down.

4. These valves must be manually adjusted by the amphibious excavator operator.

5. Once the spuds have been moved from the horizontal to the vertical position for operation, lock the spud chambers with the locking pin. Refer to Figure 3.9.

**Note:** Make sure the vertical spuds are locked at all times during operation.

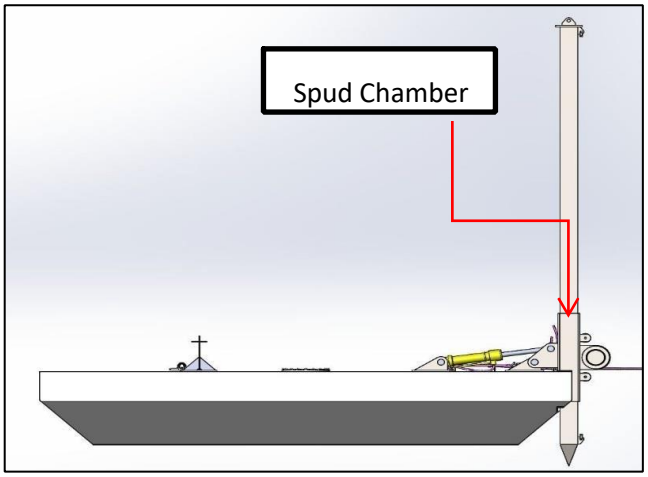


***Figure 3.8:*** *Spud in standing position*

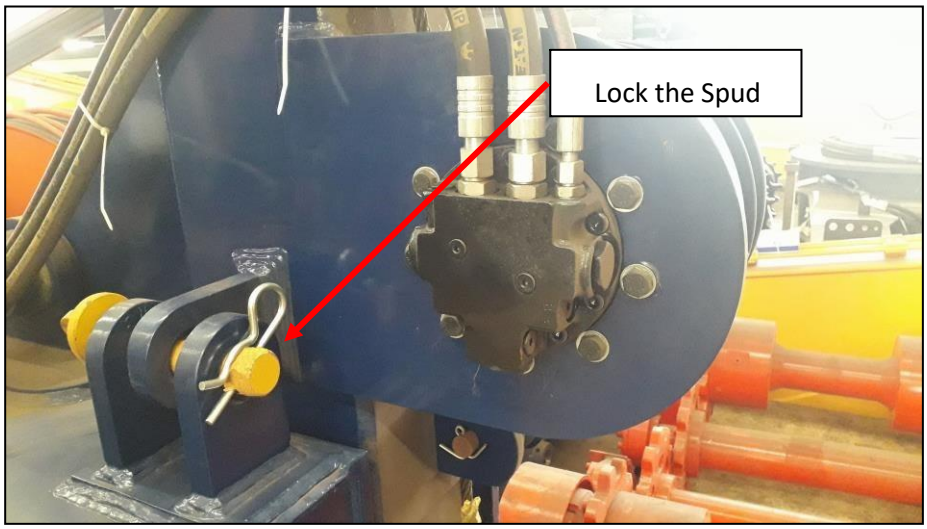


***Figure 3.9:*** *Spud locking pin*

### 3.2.10 SPUD POSITION DURING TRAVELING (HORIZONTAL POSITION)

1. Pull out the spud's locking pin.
2. Slowly control the travel lever to raise the spud until it reaches the limit plate. Refer to Figure 3.10.
3. Start traveling.

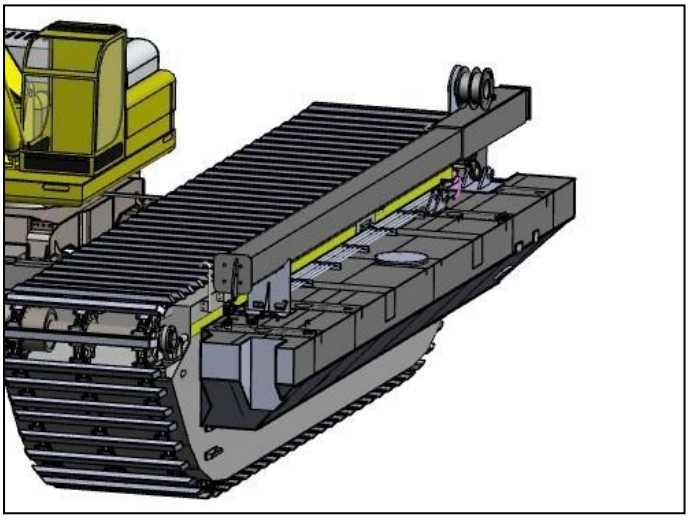

***Figure 3.10:*** *Spuds position during traveling*

## 4.0 MAINTENANCE

Proper and timely scheduled inspections and maintenance are important factors in extending the life of the machine. Especially when it's working in harsh conditions.

### 4.1 GENERAL SAFETY PRECAUTIONS

1. Inspection and maintenance can be performed by parking the machine on a solid, level surface.
2. Make sure the inspection and maintenance are carried out in good weather conditions.
3. The inspection and maintenance of hydraulic components should be carried out where there is less dust.
4. Avoid performing any inspection or maintenance while the engine is running. Always stop the engine and leave it without any load.
5. Before performing any inspection and maintenance on the machine, place the “INSPECTION / MAINTENANCE IN PROGRESS" sign, in a place that is visible to others.
6. Never disassemble or adjust the reversing valves, motor, or other hydraulic components. If a problem is detected, contact the manufacturer.
7. Use quality products when replacing parts, especially hydraulic components.
8. Bolts and piping are special items with high strength, that cannot be replaced by general ones. Bolts and hydraulic components are tightened under considerable force and require frequent inspection and tightening.
9. Avoid any scratches on the mating face of hydraulic components.
10. Pipes, hoses, oil tanks and others, must be cleaned before installation.
11. Never use an O-ring with any scratches. Make sure during assembly that the O-ring is in good condition.
12. Hoses should not be twisted during installation.
13. Operate in accordance with maintenance requirements and precautions.

## 5.0 INSPECTION, MAINTENANCE INTERVALS AND ITEMS

### 5.1 PERIODIC MAINTENANCE

To detect and repair minor defects in a timely manner, and to prevent serious malfunctions, periodic maintenance is recommended. This will increase the service life of the machine.

| | |
|---|---|
| **Daily Inspection** | Routine inspection and maintenance every day, before and after day shift operation. |
| **Monthly Inspection** | Every month |
| **Replacement of filter, hydraulic oil and lubrication** | Replace in accordance with replacement intervals when performing any daily and monthly inspection and maintenance procedures. |

### 5.2 REQUIREMENTS FOR PERFORMING INSPECTION AND MAINTENANCE

1. Park the machine on a level surface and lower the bucket to the ground. Remove the ignition key from the switch and lock the cabin door. Refer to Figure 5.0.

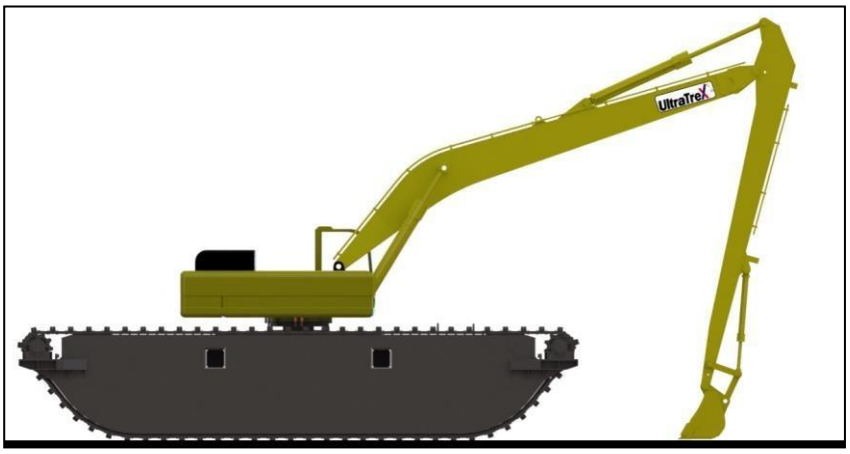


***Figure 5.0:*** *Amphibious excavator position for maintenance*

2. Before performing any inspection or maintenance on the machine, place an “INSPECTION / MAINTENANCE IN PROGRESS" sign in a place visible to others, to avoid unwanted incidents. Refer to Figure 5.1.

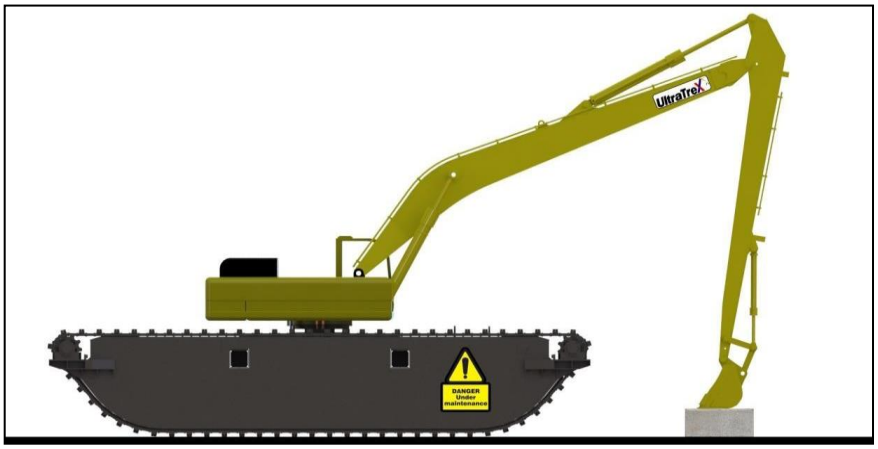


***Figure 5.1:*** Sign during inspection and maintenance

## 5.3 INSPECTION AND MAINTENANCE (BEFORE OPERATING MACHINE)

**Suggested period for inspection and maintenance activity:**

| **Inspection and maintenance activities** | **Period** |
|---|---|
| Connection and operation of all hydraulic hoses | a) Daily |
| Greasing | a) Daily |

| | |
|---|---|
| Loosened or falling out bolts, nuts, and gaskets. | a) Daily |
| Tension track chain and check for abrasion or damage to the track shoes. | a) Monthly<br>b) Do if necessary |
| Lubricate the chain | a) Long time parking: weekly<br>b) Working: monthly |
| Tightening the locking screw of the slewing frame | a) Monthly<br>b) Do if necessary |
| Condition of the amphibious undercarriage body and its parts | a) Daily<br>b) Do if necessary |
| Oil change of the drive shaft gearbox | a) 3 months / 1000 hours |

## 5.4 OTHER MAINTENANCE

### 5.4.1 TRAVEL DEVICE

Figure 5.2 shows the oil inlet and outlet of the travel devices. Place the machine on level ground, and fill the oil inlet until the oil comes out of the level plug.

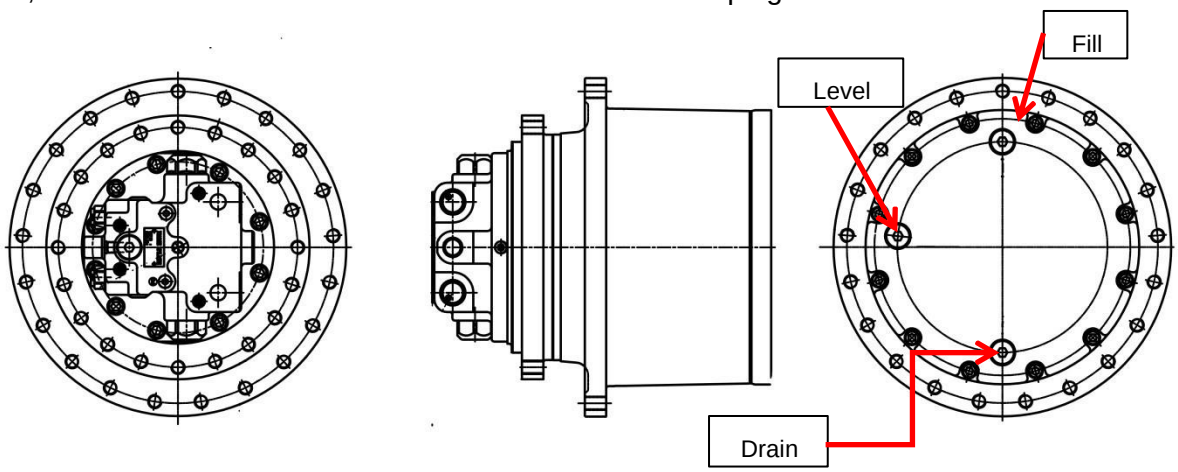


***Fig 5-2:*** *Oil inlet and outlet*

Each drive shaft comes with a travel device. The compartments of each travel device (housing) are filled with 4 liters of grade 90 gearbox oil, to prevent internal rust. Refer to Figure 5.3.

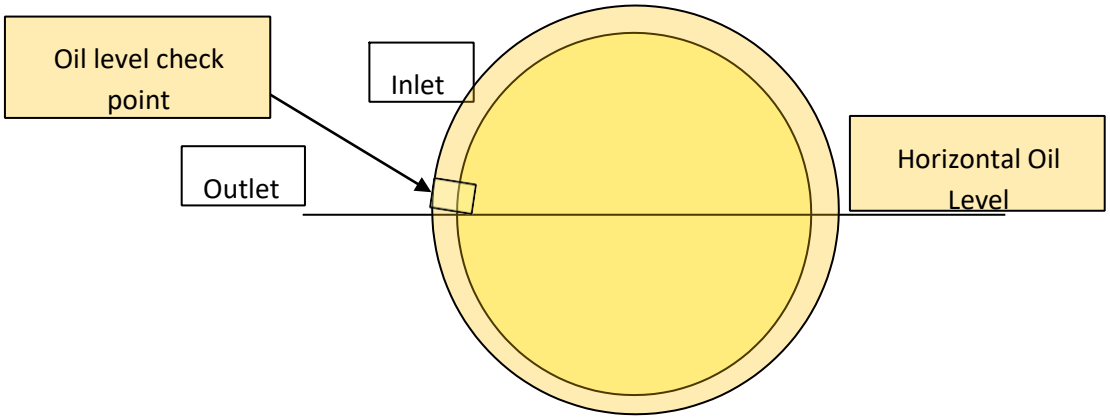


***Figure 5.3:*** *Checking the oil level*

To check the oil level, park the machine on level ground. Rotate the travel motors until the oil level checkpoint is approximately horizontal to an imaginary line as per figure 5.3.

***IMPORTANT: The oil level checkpoint must be higher than the horizontal oil level before removing the plug. To refill the gearbox oil, park the machine on level ground. Open the inlet and outlet plugs. Refill the oil until it reaches the horizontal oil level and a little comes out of the outlet plug. Then close the plugs again and tighten them properly.***

### 5.4.2 TIGHTENING OF THE SLEWING FRAME MOUNTING BOLT

Perform a proper check of all the front and rear slewing frame mounting bolts. After a few hours of operation, there is the possibility that the bolts may loosen. As shown in Figure 5.4, the slewing frame mounting bolts must be retightened back if they have loosened, using the correct size spanner to prevent the bolt from breaking.

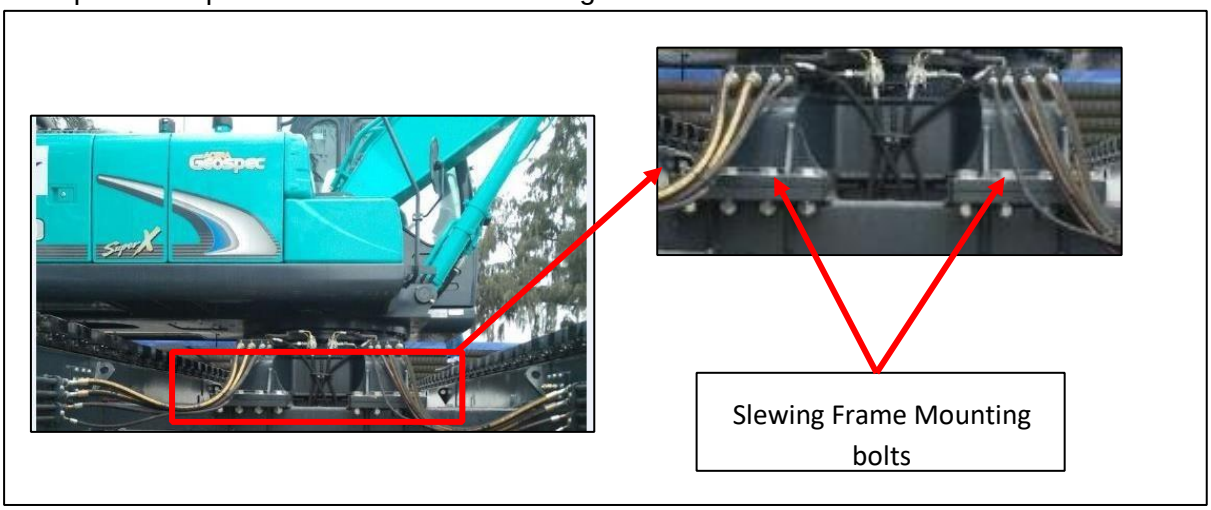


***Figure 5.4:*** *Slewing frame mounting bolts*

### 5.4.3 ADJUSTING THE TRACK TENSION AND GREASING THE TRACK CHAINS

To tension the track, first loosen the hex nut-A and then loosen the hex nut-B as shown in Figure 5.5. Unscrew the adjusting bolts (M36) to increase the tension of the track chains. Make sure that the tensions of both amphibious undercarriages are the same. Once tensioning is complete, all these must be retightened. Figure 5.6 shows the correct tension measurement for the track chain.

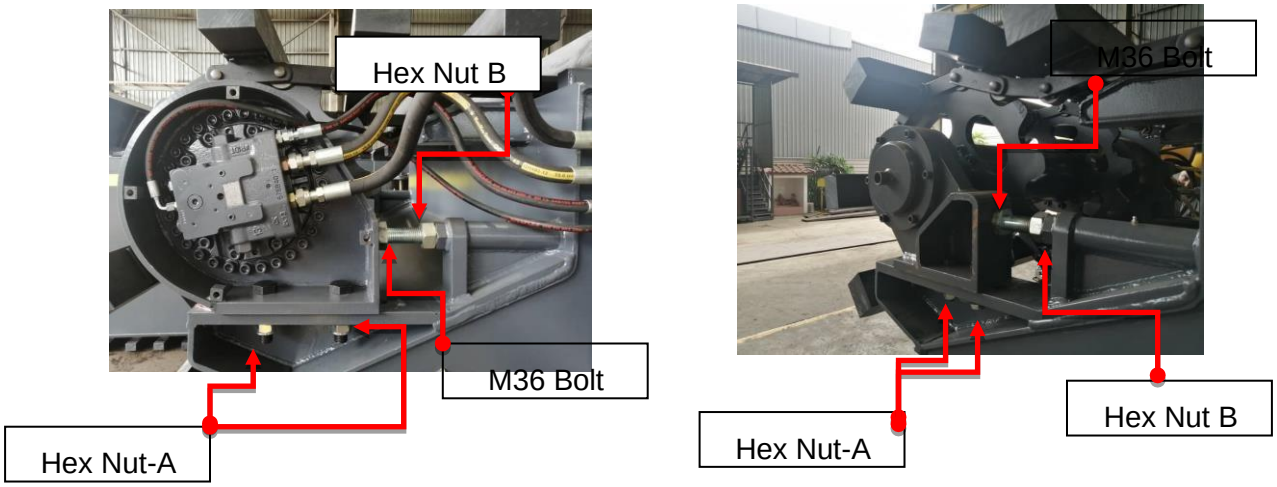


***Figure 5.5:*** *Position of chain bolts and nuts*

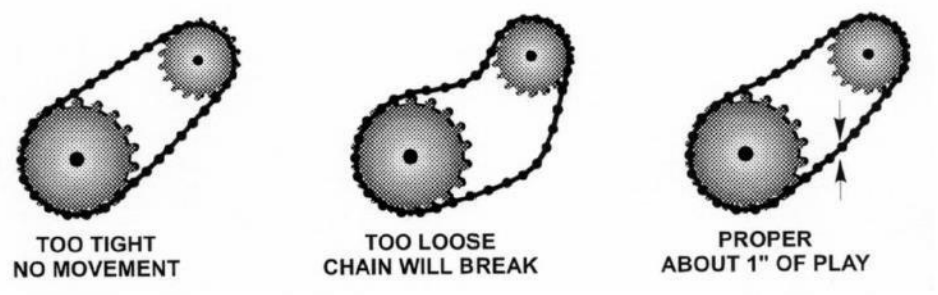


***Figure 5.6:*** *Track chain tensioning*

After the tensioning process is completed, it is necessary to grease the track chains, so that the amphibious excavator can move smoothly. This procedure must be followed if the amphibious excavator has been parked for an extended period.

### 5.4.4 WEAR PLATES

The wear plates, which are in contact with the chain rollers, are welded to the pontoons. The wear plates must be replaced if they are badly worn. The operator can use carbon arc to remove the used wear plates and replace them with new ones. Refer to Figure 5.7.

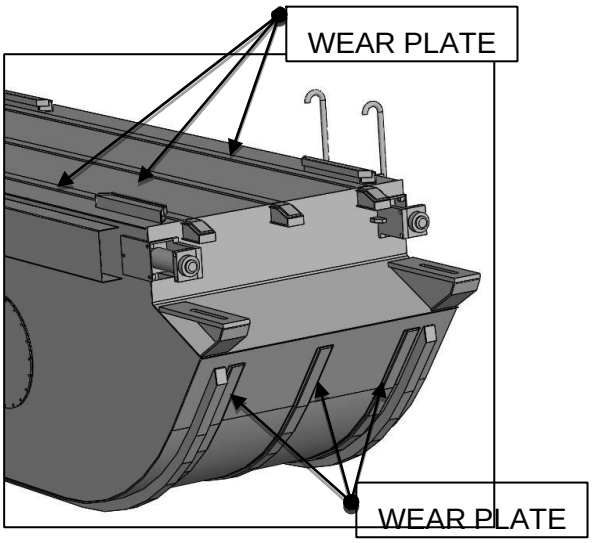


***Figure 5.7:*** *Wearing Plate*

## 6.0 INSTALLATION AND TRANSPORTATION

### 6.1 TRANSPORTATION

For transportation purposes, all parts of the AT300-V2/AT300PS-V2 must be disassembled before being loaded onto the truck trailer. Follow the instructions in section "**6.4 DISASSEMBLING THE MACHINE"** to do the disassembly process. Load the amphibious parts carefully and make sure they are well placed and secure.

### 6.2 ASSEMBLING THE MACHINE

After unloading the transport, the reassembly sequences are as follows:

1. Get a crane of the required reach and size to lift the excavator undercarriage. Select an area of flat, level ground, large enough for the whole machine. Place and align the left and right undercarriage body components with the correct distance between them. Refer to Figure 6.2.

***Figure 6.2***

2. Install the crossbeams on the inner C-Chamber of one of the undercarriage bodies, according to the correct position. Use the locking pin to lock the crossbeams. Refer to Figure 6.3.

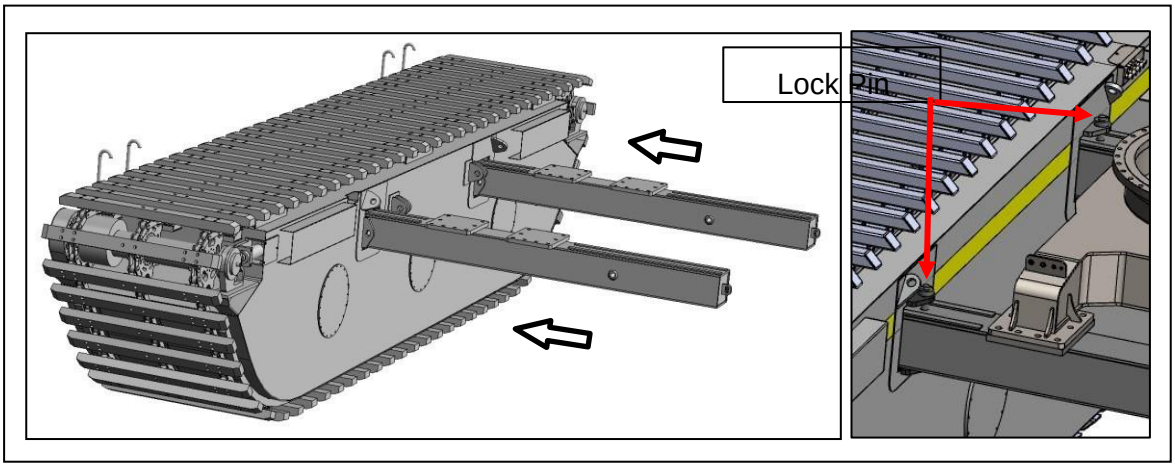


***Figure 6.3***

3. Move the second undercarriage unit to the preassembled unit. Insert the undercarriage into the crossbeam. Use the locking pin to lock the crossbeams. Refer to Figure 6.4.

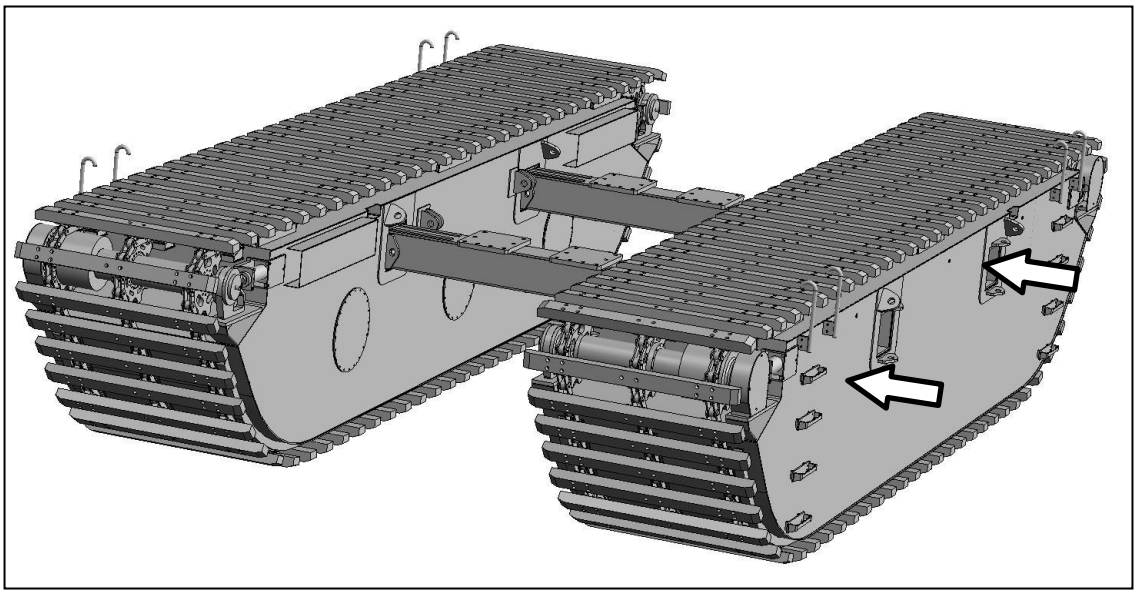

***Figure 6.4***

4. Place the slewing frame on the crossbeams. Align the slewing frame mounting flange with the crossbeam mounting flange. Refer to Figure 6.5.

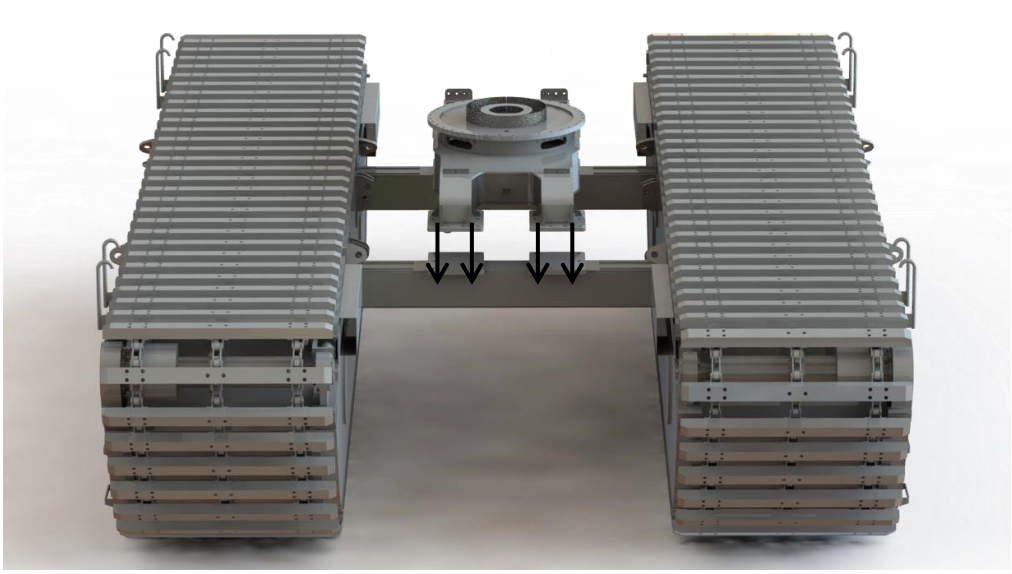

***Figure 6.5***

5. Tighten the slewing frame upper mounting flange onto the bottom mounting flange as shown in Figure 6.6. There are a total of 32 bolts at the four corners that need to be tightened.

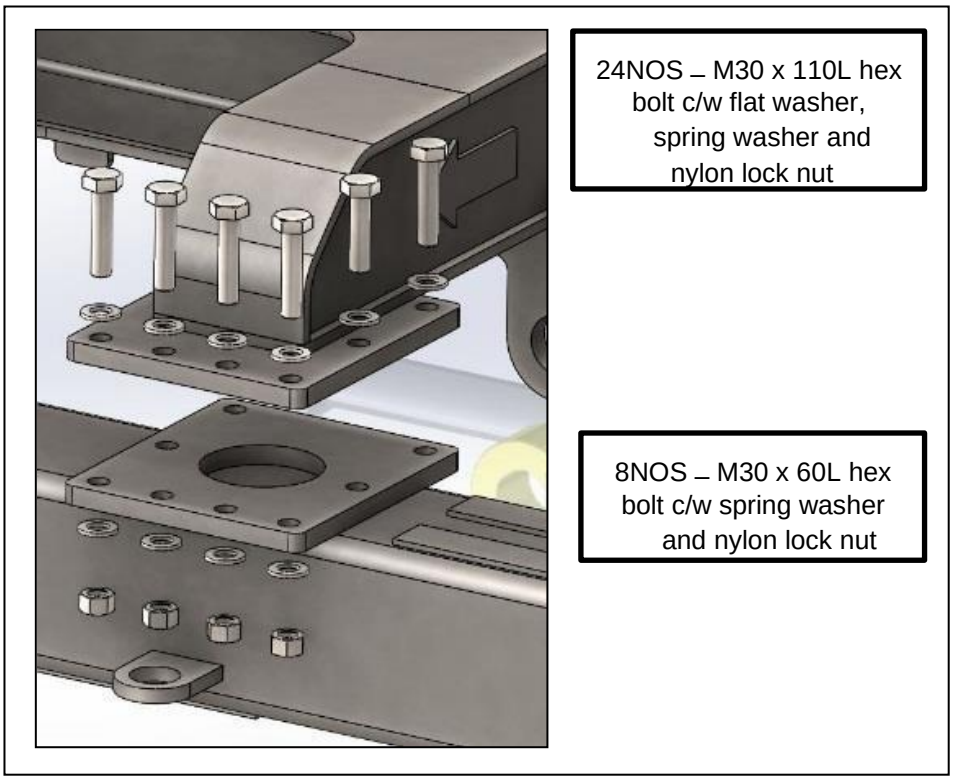


***Figure 6.6***

6. Install the excavator's upper body and attachments by referring to the manual and guidelines provided by the upper body manufacturer. Check the alignment of both the upper body swivel flange and the slewing frame flange, and tighten all the bolts thereafter. Refer to Figure 6.7.

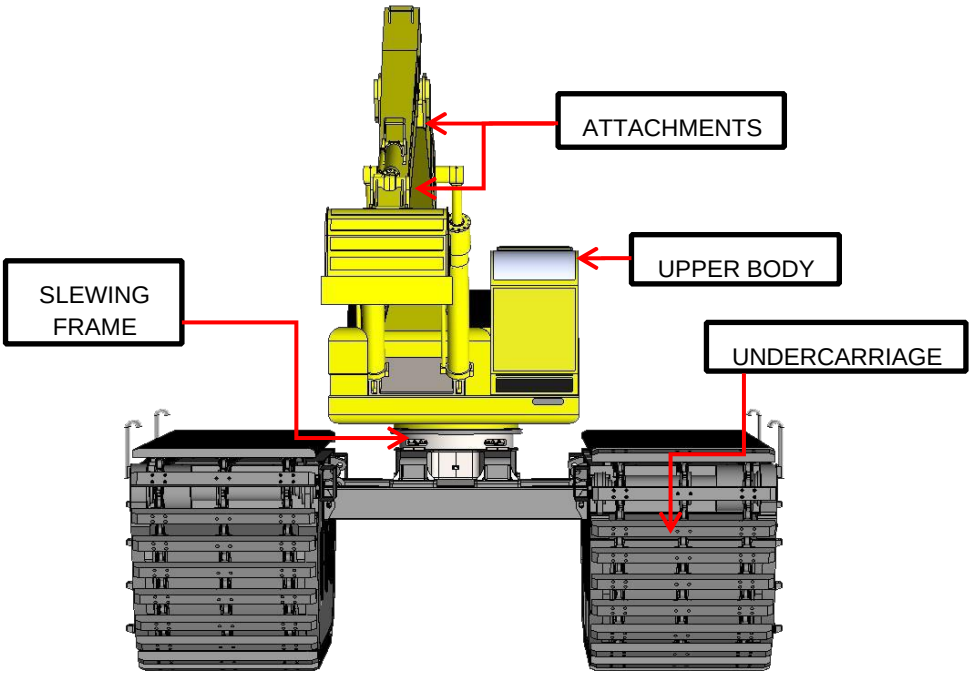

***Figure 6.7***

7. Install the hydraulic hoses from the pontoon to the slewing frame and from the slewing frame to the upper body center joint. Then install the hydraulic hoses one at a time by removing the protective caps, and attaching the hoses to the right fitting. Check all connections for proper tightness. Refer to Figures 6.8 and 6.9.

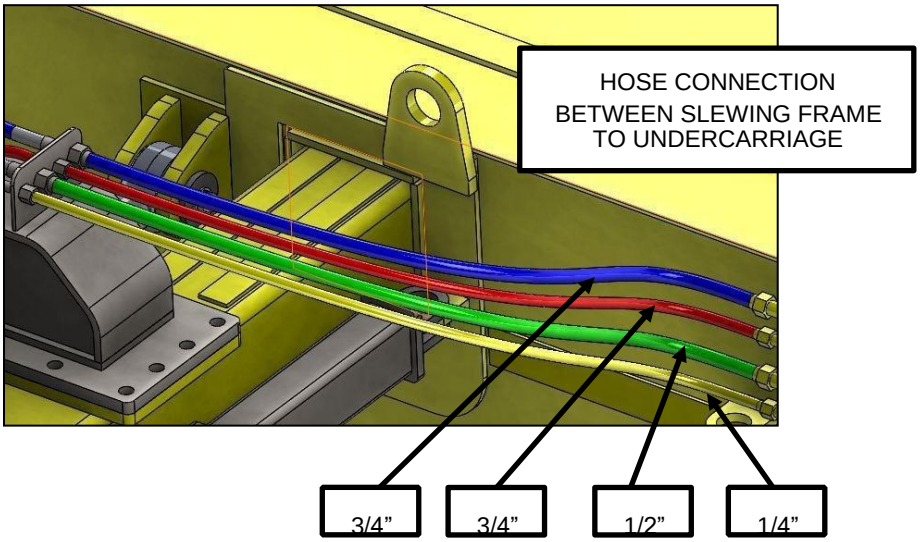


***Figure 6.8:*** *Hydraulic hose connections from the slewing frame to the pontoon*

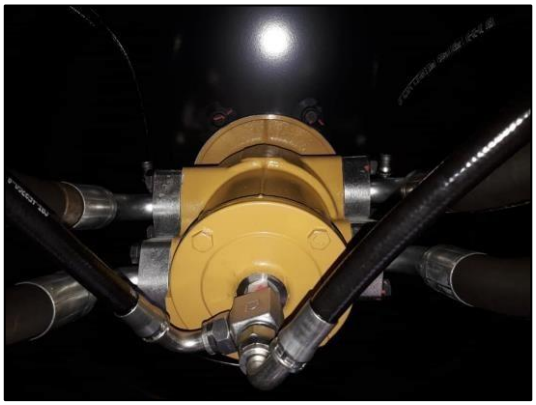

***Figure 6.9:*** *Hydraulic hose connection from the slewing frame to the center joint*

8. Follow the start-up instructions provided with the operation manual for the upper body, and start the machine. Operate the hydraulic system and check for proper rotation of the hydraulic motor, the long reach arm or standard arm movements, and any hydraulic leakage.
9. The machine is now ready for operation.

**Note:** Use only the suitable sized hydraulic hoses to connect each other. Before connection, clean the hydraulic fittings and hoses. After disassembling the hoses, make sure each hose and fitting are well sealed.

## 6.3 ASSEMBLING THE SIDE PONTOONS

1. Using the crane, lift the side pontoon and make sure that the center of the side pontoon box beam is aligned with the S-chamber of the pontoon.
2. Insert the side pontoon box beam into the S-chamber of the pontoon.
3. Lock the side pontoon by inserting the locking pin as shown in Figure 6.10.
4. Connect the hydraulic system from the slewing frame two-way ball valves to the pontoon body, and the two-way ball valves on the top of the side pontoon to the pontoon body, as shown in Figure 6.11 and Figure 6.12.

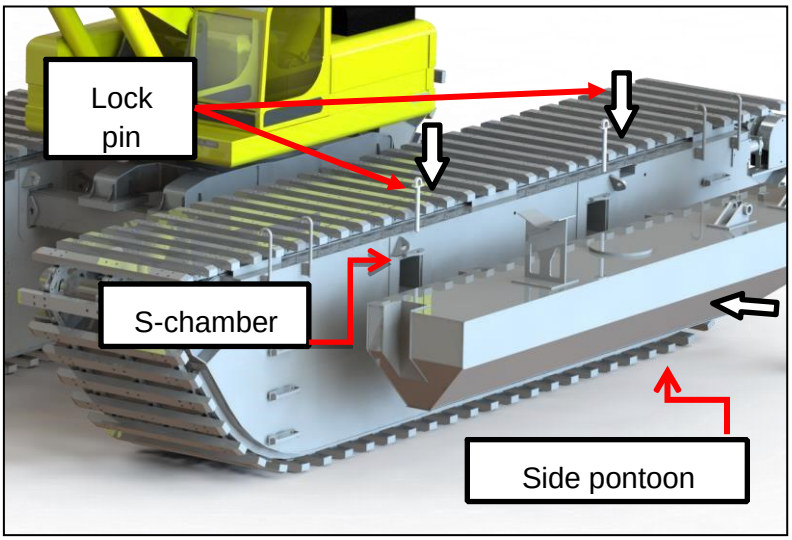


***Figure 6.10***

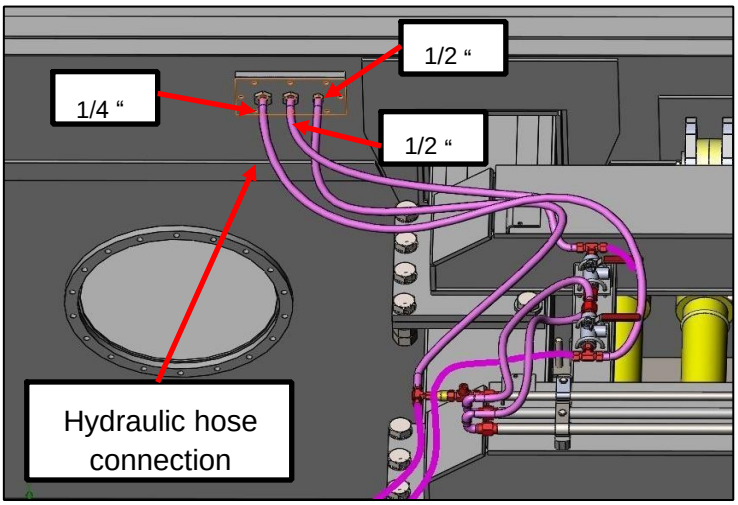

***Figure 6.11***

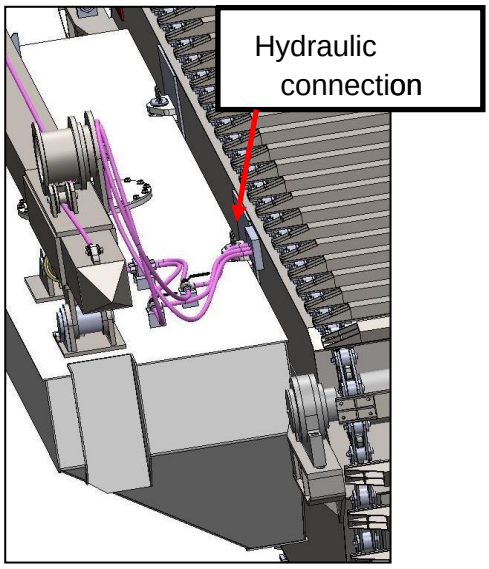


***Figure 6.12***

## 6.4 DISASSEMBLING THE MACHINE

The disassembling sequences of the amphibious hydraulic undercarriage are as follows:

1. Disconnect all hydraulic hoses from the center joint and slewing frame. Caution on hydraulic oil spills. Plug open hoses with caps or plugs.
2. Remove the hydraulic cylinder pins from the undercarriage hydraulic cylinder brackets (it is not necessary to remove the hydraulic cylinder from the slewing frame). Use a rope to tie or hang the hydraulic cylinder to the slewing frame.
3. Take out all the hex bolts connecting the slewing frames to the crossbeams. Slowly pull the slewing frame off the crossbeams.
4. Separate one of the undercarriages apart to allow room to release the crossbeams.
5. Finally, take out the two crossbeams.
6. The disassembly process is now complete.

**Thank you for taking the time to read this manual.**
**We hope you have a pleasant experience using our Amphibious Excavator AT300-V2/AT300PS-V2. For any further information, do not hesitate to contact us.**

HawkExcavator.com/contact

*Version-2 11/16/2021*